Toyota Corolla
PSU-300CRA Sound System Upgrade Installation Manual

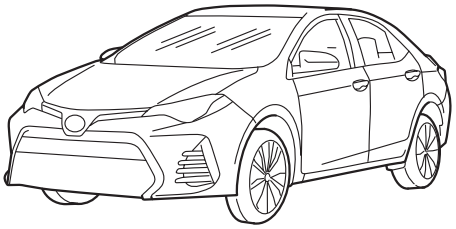

- Model: Corolla
- Model Year: 2014 – UP

*Not compatible with factory amplified systems

	Model	Year
Toyota	Corolla	2014 – UP

* The specified vehicles have been tested and have met compatibility specs at the time of testing. Compatibility is not guaranteed if the manufacturer has made production changes to the listed vehicles above.

⚠ Warning: Before you begin, remove the ground wire from the NEGATIVE (-) terminal of the battery. Failing to do so can lead to electric shock, injury or damage to equipment.

Introduction

- Congratulations on purchasing the PSU-300CRA. This installation manual is designed to take you through the step-by-step installation of the PSU-300CRA into a 2014 - UP Toyota Corolla. Please familiarize yourself with the owner's manual and if you still have additional questions please call 1-800-TECH-101.

Note

- Design and specifications are subject to change without notice for improvement.

To Ensure Safe Use, Always Follow These Precautions

- The installation of this product requires specialized skills and experience. We recommend that you have the product installed by an Alpine authorized dealer.
- Before you use this product, be sure to carefully read this installation manual and the separate user's manual so that you can use the product correctly. Alpine Electronics bears no responsibility for problems that arise as a result of failure to follow the instructions in the manuals.
- This manual includes a number of symbols that are intended to help you use the product safely, to prevent harm to you and others, and to protect against damage to property. These symbols and their meanings are listed below. Make sure you fully understand these symbols before you begin reading the main text.

Explanations of Injury and Damage That May Result from Incorrect Use

⚠ Warning	Ignoring the content marked by this indication and using the product incorrectly may lead to death or serious injury.
⚠ Caution	Ignoring the content marked by this indication and using the product incorrectly may lead to injury or property damage.

Types of Precautions

Forbidden	Indicates actions that are forbidden (must not be performed)
Forbidden	Indicates that disassembly is forbidden.
Mandatory	Indicates actions that are mandatory (must be performed)
	Marks content that should receive your full attention.

⚠ Warning

Do not disassemble or modify the product. Doing so could lead to an accident, fire, or electric shock. Forbidden

Store screws and other small objects where small children cannot reach them. If one of these small objects is swallowed, consult with a doctor immediately.

When replacing fuses, be sure to use fuses with the specified current rating. Failing to do so could lead to an accident or fire. Forbidden Mandatory

Only connect the product to a 12 VDC negative ground car. Failing to do so could lead to an accident or fire. Mandatory

Before you begin wiring, remove the ground wire from the negative terminal of the battery. Failing to do so could lead to electric shock or injury.

Do not cut the insulation on a cord and take power from another device. Doing so could lead to fire or electric shock. Forbidden

Do not install the product in a location where it will obstruct the driver's forward view; interfere with the operation of the steering wheel, gearshift, or the like; or pose a threat to passengers. Doing so could lead to an accident or injury. Forbidden

When making a hole in the vehicle body, be careful to avoid damaging pipes, the fuel tank,electrical wiring, and the like. This kind of damage could lead to an accident or fire.

When installing and grounding the product, do not use any of the bolts or nuts of the steering wheel, brakes, fuel tank, or the like. Doing so could make the brakes stop working or lead to fire. Forbidden

Do not install the product near the passenger-side airbag. Doing so could interfere with the operation of the airbag and lead to an accident or injury. Forbidden

Bundle cords so that they don't interfere with driving. Wrapping cords around the steering wheel, gearshift, brake pedal, or the like, could lead to an accident or damage equipment.

⚠ Caution

Connect the product properly according to the instructions. Failing to do so could lead to fire or an accident. Forbidden

Do not sandwich cords between the seat railing or allow them to touch protrusions. Resulting breaks or shorts could lead to electric shock or fire.

Do not block vents or heat sinks. Doing so could lead to fire or damage equipment.

Use the accessories according to the instructions, and attach them securely. Failing to do so could lead to an accident or damage equipment. Forbidden

Do not install the product where it may be exposed to water or in a place with high levels of humidity or dust. Doing so could lead to fire or damage equipment. Forbidden

The installation and wiring of this product requires specialized skills and experience. Have the product installed by an Alpine authorized dealer.

Tools Required

Panel Removal Tool	Sockets	Phillips Screwdriver
	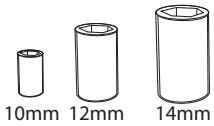	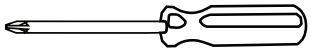
Wire Cutters	**Extension**	**Ratchet**
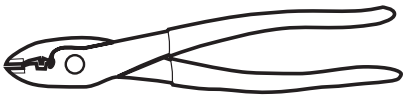	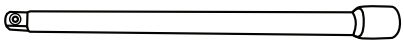	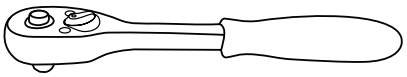
Flathead Screwdriver	**Cordless Power Drill**	**Cordless Impact Gun**
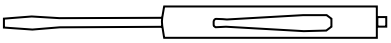	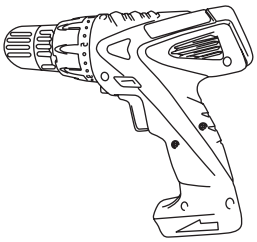	

Accessory List

Amplifier Assembly	T-Harness	Main Harness
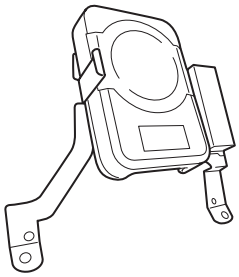	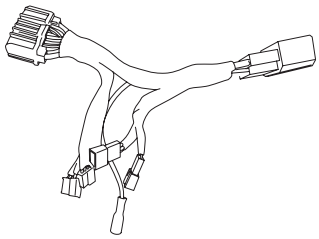	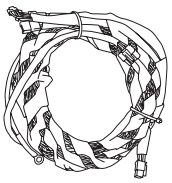
(10) Cable Ties	**RCA Adapters**	**Power Cable**
	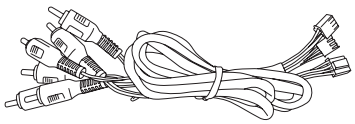	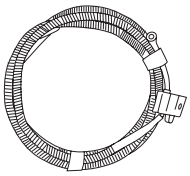
Lock Washers	**½” Wafer head self tapping screw**	
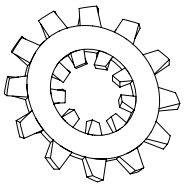	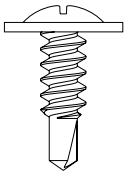	

Factory Equipment Removal Process

1 Turn shifter knob counter clock wise and remove it. Use a panel removal tool to release the shifter panel and remove it.

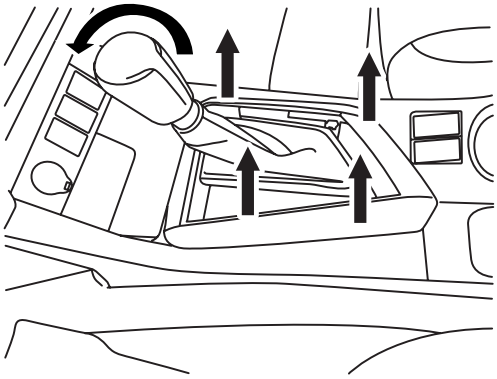

2 Use a panel removal tool to release the clips on the parking brake/ cup holder cover, disconnect and remove it.

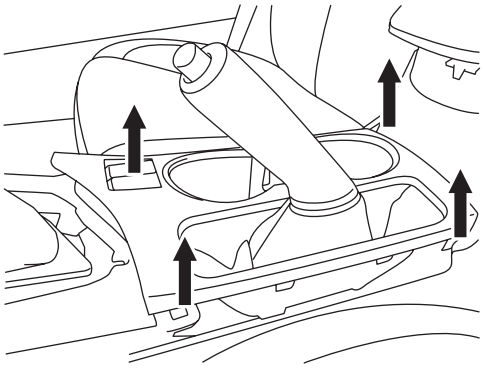

3 Use a panel removal tool release the clips on the front console panel and remove it.

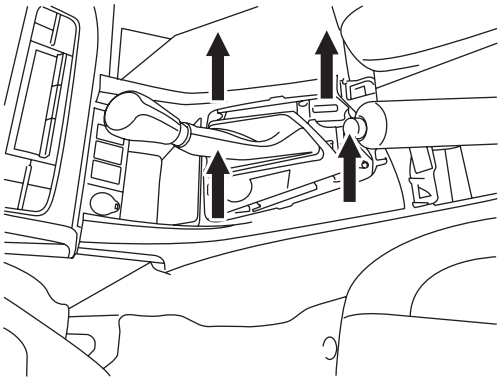

4 Remove the shifter release cover with a small flathead screw driver and press it to shift to “D” and allow the panel to come off.

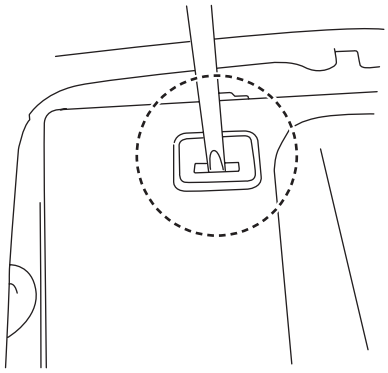

2014 – 2016 Factory Radio Removal Process

1 Use a panel removal tool to release the clips and remove the center dash trim bezel.

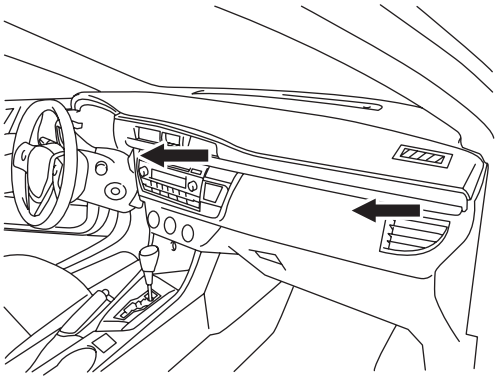

2 Use a panel removal tool to release (6) clips and remove the radio bezel.

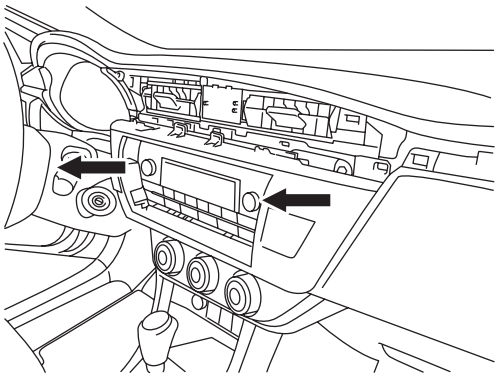

2014 – 2016 Factory Radio Removal Process (continued)

3 Extract (4) 10mm screws from the factory radio, disconnect and remove it.

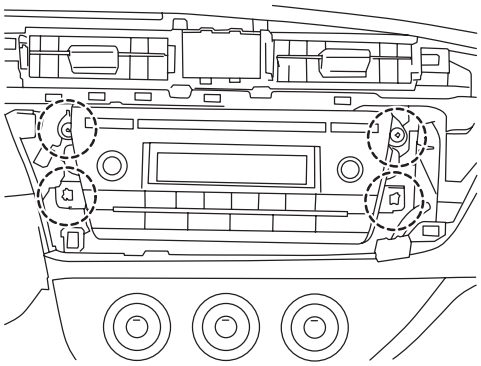

2017 – 2018 Factory Radio Removal Process

1 Using a panel removal tool release the clips and remove the radio bezel.

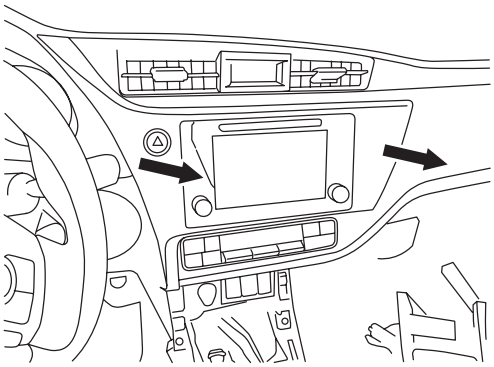

2 Extract (4) 10mm screws from the factory radio and remove it.

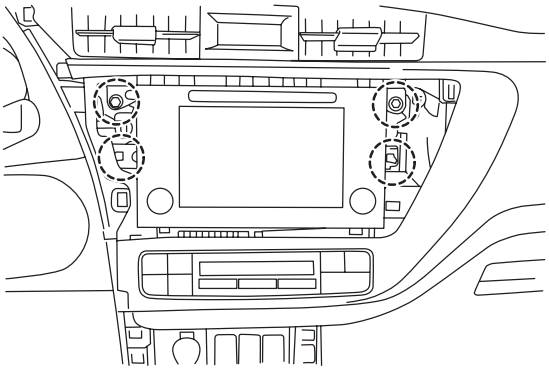

Factory Equipment Removal Process (continued)

5 Remove the under dash cover on the passenger side by pressing (3) tabs to release the clips.

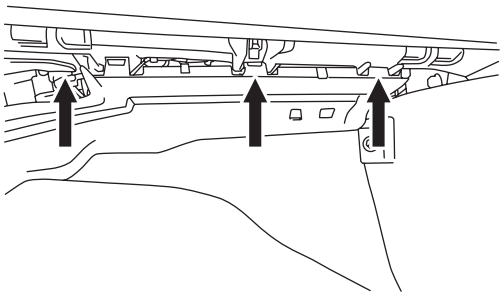

6 Remove the glovebox by releasing the stopper and pressing both side tabs towards each other.

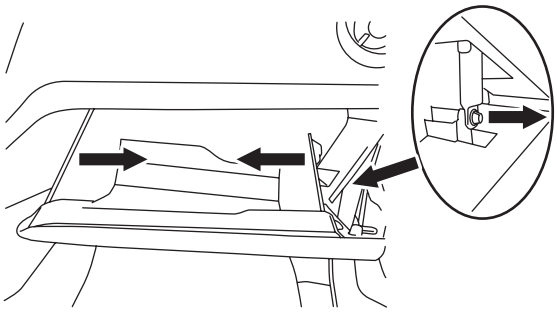

Factory Equipment Removal Process (continued)

7 Remove (4) 14mm screws from the passenger side seat.

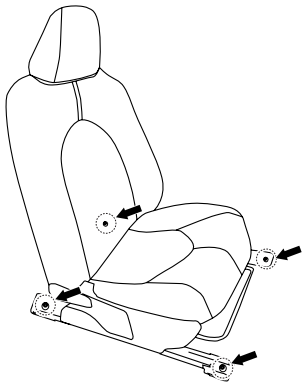

8 Tilt the passenger seat towards the back to reveal (4) connectors. Disconnect and remove the seat.

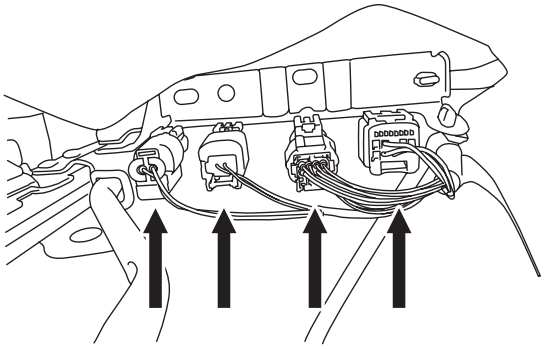

Installation

1 Connect the power cable to the Positive (+) battery terminal in engine compartment and route the cable towards the passenger side as shown below. **Note: The negative terminal should remain disconnected unit the installation is completed.**

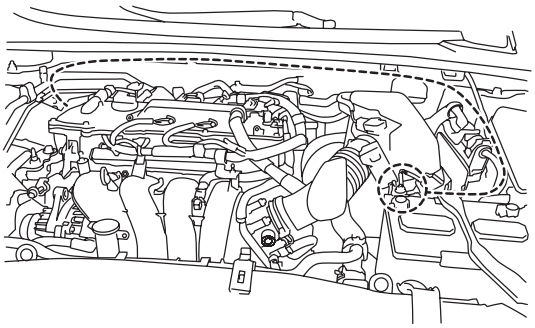

2 Route the power cable thru the rubber grommet on the passenger side firewall.

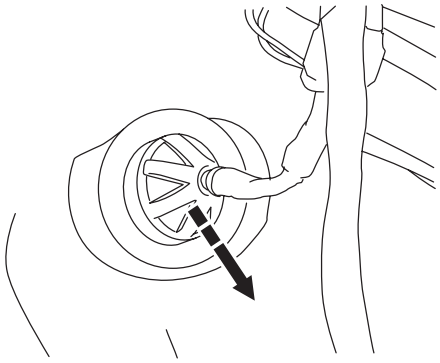

3 Mount the Subwoofer level remote under the cigarette lighter panel with the provided hook and loop adhesive tape and route the cable to the passenger side seat.

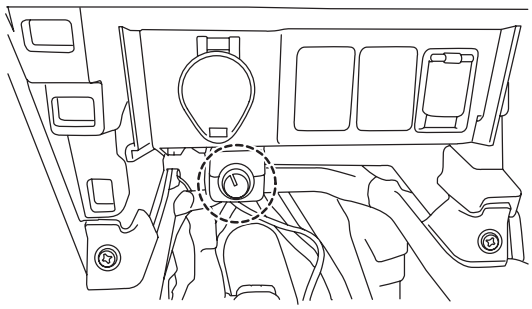

4 Connect the power cable to the main harness.

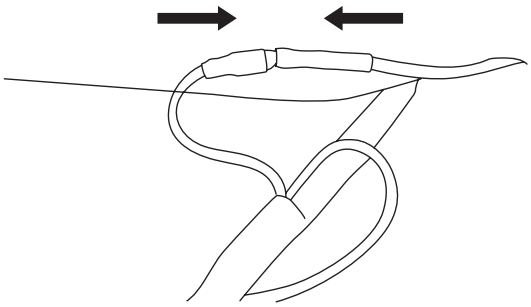

Installation (continued)

5 Connect the main harness and subwoofer level knob to the amplifier assembly and align it to the seat mounting holes.

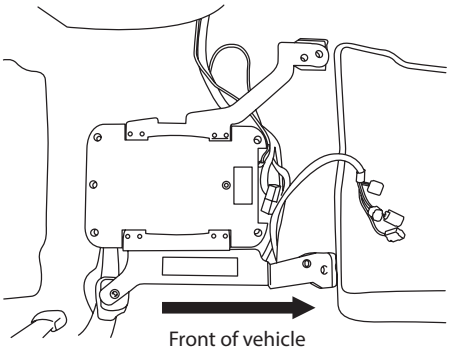

6 Pull the carpet slightly from the left front mounting bolt are and remove paint to expose bare metal. Attach the Negative (-) ground from the main harness with the provided wafer head screw and lock washer. **Note: Be sure to stay clear of the seat mounting area.**

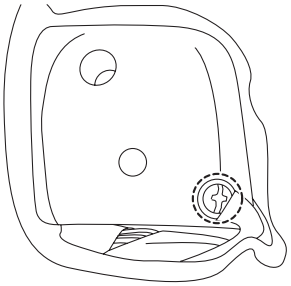

7 Route the main harness along the side of the center console (as shown below) to the radio cavity and secure any excess wiring with the provided cable ties.

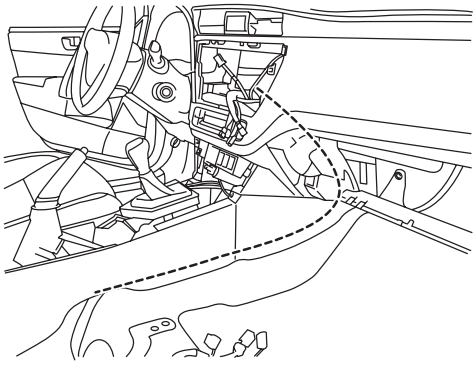

8 Connect the wiring according to the corresponding system diagram on pages 8,9 or 10. **Note: Be sure to set all gains and crossover settings are as recommended on the diagrams.**

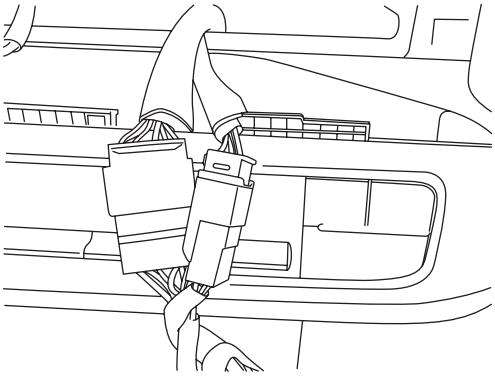

9 Replace all removed components and re-connect the Negative (-) battery terminal.

Seat screw cover trimming

Due to the bracket location the rear right screw cover will no longer clip back on unless, the highlighted section is trimmed out to clear the bracket. Follow the dimensions below to trim the required area.

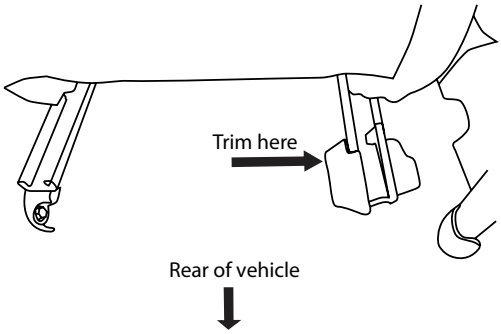

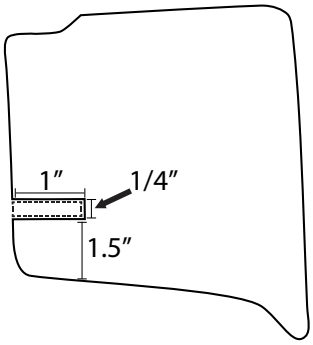

OEM Head Unit Wiring Diagram

To Vehicle Connectors

OEM T-HARNESS ADAPTER

TO OEM HEAD UNIT

Rear Speaker 6-Pin White Connector

Power Front Speaker 10-Pin White Connector

Front Speaker 4-PIN WHITE CONNECTOR

Rear Speakers 4-PIN BLACK CONNECTOR

Blue/White Amp Turn-On

Front

Rear

Subwoofer

WHITE/GRAY White Connector

GREEN/PURPLE Black Connector

BROWN/ORANGE Red Connector

Subwoofer Level Remote

BROWN/ORANGE Red Connector RCA Adapter

BLACK To Chassis Ground

RED To Battery Cable

To Vehicle's Battery POSITIVE (+) Terminal

Amplifier Speaker Wiring

CH 1 - White (+) White/Black (-)
CH 2 - Gray(+) Gray/Black (-)
CH 3 - Green (+) Green/Black (-)
CH 4 - Purple (+) Purple/Black (-)

ALPINE
HEAD UNIT POWER PACK KTP-445U

POWER PACK AMPLIFIER KTP-445U

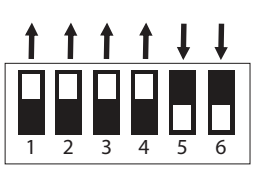

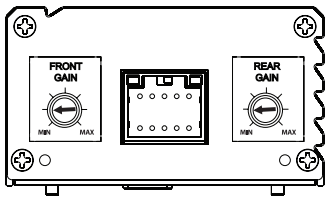

SUBWOOFER PWE-S8

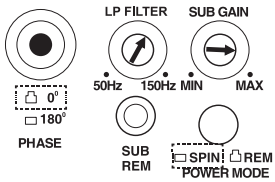

NOTE: FOR BEST PERFORMANCE SET AMPLIFIER AND SUBWOOFER TO RECOMMENDED SETTINGS AS SHOWN ABOVE

Aftermarket Head Unit Wiring Diagram

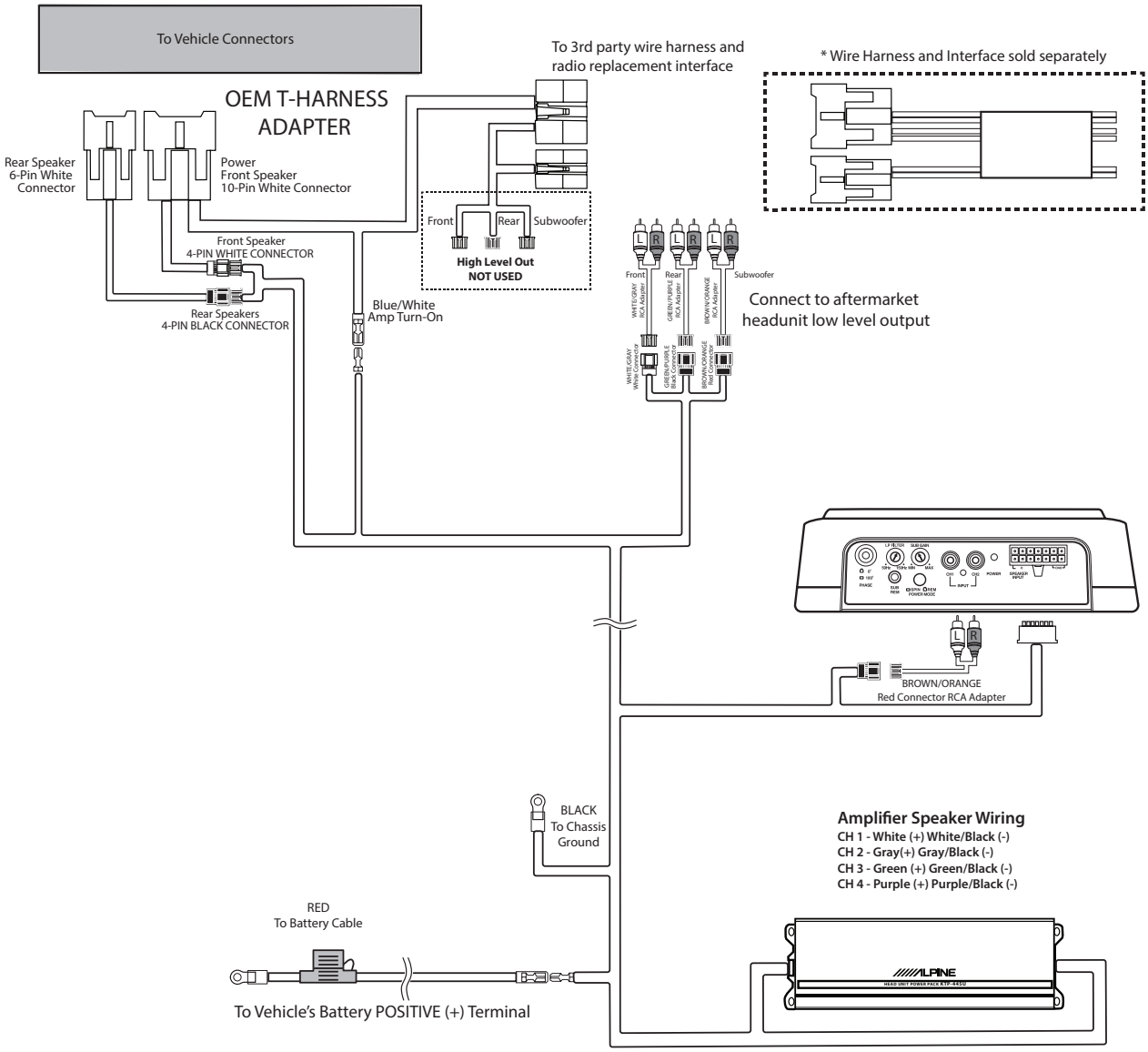

POWER PACK AMPLIFIER KTP-445U

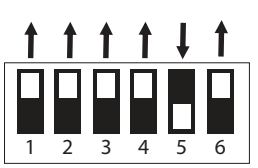

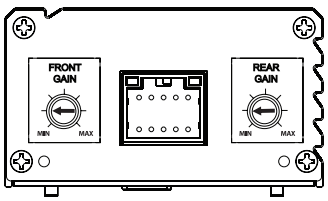

SUBWOOFER PWE-S8

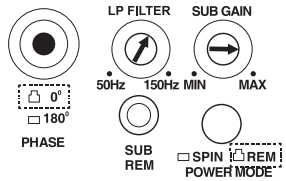

NOTE: FOR BEST PERFORMANCE SET AMPLIFIER AND SUBWOOFER TO RECOMMENDED SETTINGS AS SHOWN ABOVE

Alpine Restyle Head Unit Wiring Diagram

To Vehicle Connectors

To OBDII Connector

Connect to Alpine Restyle head unit low level output

Front Rear Subwoofer

WHITE/GRAY White Connector RCA Adapter

GREEN/PURPLE Black Connector RCA Adapter

BROWN/ORANGE Red Connector RCA Adapter

4 PIN BLACK CONNECTOR

Rear Rear

Front Front

4 PIN WHITE CONNECTOR

Blue/White Amp Turn-on

Blue Amp Turn-on

iDatalink MAESTRO Module

BROWN/ORANGE Red Connector RCA Adapter

BLACK To Chassis Ground

RED To Battery Cable

For a detailed Alpine Restyle head unit wiring diagram refer to it's corresponding installation manual.

To Vehicle's Battery POSITIVE (+) Terminal

Amplifier Speaker Wiring

CH 1 - White (+) White/Black (-)
CH 2 - Gray(+) Gray/Black (-)
CH 3 - Green (+) Green/Black (-)
CH 4 - Purple (+) Purple/Black (-)

POWER PACK AMPLIFIER KTP-445U

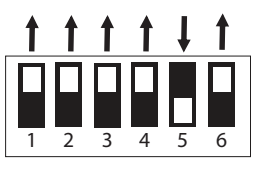

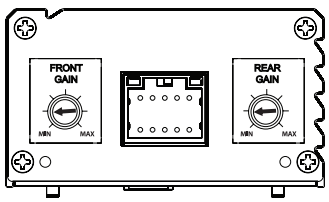

SUBWOOFER PWE-S8

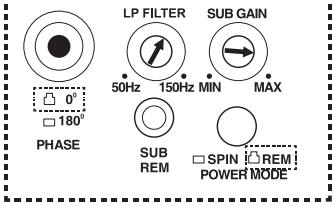

NOTE: FOR BEST PERFORMANCE SET AMPLIFIER AND SUBWOOFER TO RECOMMENDED SETTINGS AS SHOWN ABOVE

Troubleshooting Guide

Symptom		Possible Cause	Remedy
1	System will not turn on	Missing or blown fuse at the battery	Insert or replace fuse
		Radio's Remote Turn-On wire may be disconnected.	Verify that Remote Turn-On wire is connected.
2	Volume is too loud with aftermarket headunit.	Speaker level out is connected at the T-Harness.	Ensure that the low level RCA adapters are used in aftermarket headunit system (refer to the corresponding wiring diagram).
		Amplifiers gain control has not been properly adjusted.	Refer to the corresponding system diagram.
3	Subwoofer sounds very low.	Gain level may be down to the lowest setting.	Adjust level to reccommended setting (refer to the corresponding wiring diagram).
		Audio Phase may be reversed.	Ensure that the PHASE is set to 0˚.
4	One of the speakers has no sound.	Disconnected pin or loose connection.	Check all connections to the speaker, loose pins, disconnected terminals etc..
5	Airbag light is on	Failed to disconnect the battery while working on the vehicle.	Disconnect the battery and re-connect after 5 minutes. If problem is not solved, the vehicle will have to be taken to a Toyota dealer.
6	System turns on only on radio source	Aftermarket Power Antenna wire is connected to amp	Connect the Remote Turn-On wire (Blue/White) to the Blue wire on the amplifier harness.