Toyota Tacoma
PSU-300TCM Sound System Upgrade Installation Manual

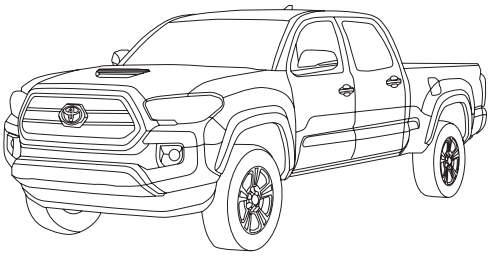

- Model: 4-door Tacoma
- Model Year: 2016 - UP

*Not compatible with factory JBL® amplified systems

	Model	Year
Toyota	Tacoma	2016 – UP

* The specified vehicles have been tested and have met compatibility specs at the time of testing. Compatibility is not guaranteed if the manufacturer has made production changes to the listed vehicles above.

⚠ Warning: Before you begin, remove the ground wire from the NEGATIVE (-) terminal of the battery. Failing to do so can lead to electric shock, injury or damage to equipment.

Introduction

- Congratulations on purchasing the PSU-300TCM. This installation manual is designed to take you through the step-by-step installation of the PSU-300TCM into a 2016 – UP 4-door Toyota Tacoma. Please familiarize yourself with the owner's manual and if you still have additional questions please call 1-800-TECH-101.

Note

- Design and specifications are subject to change without notice for improvement.

To Ensure Safe Use, Always Follow These Precautions

- The installation of this product requires specialized skills and experience. We recommend that you have the product installed by an Alpine authorized dealer.
- Before you use this product, be sure to carefully read this installation manual and the separate user's manual so that you can use the product correctly. Alpine Electronics bears no responsibility for problems that arise as a result of failure to follow the instructions in the manuals.
- This manual includes a number of symbols that are intended to help you use the product safely, to prevent harm to you and others, and to protect against damage to property. These symbols and their meanings are listed below. Make sure you fully understand these symbols before you begin reading the main text.

Explanations of Injury and Damage That May Result from Incorrect Use

⚠ Warning	Ignoring the content marked by this indication and using the product incorrectly may lead to death or serious injury.
⚠ Caution	Ignoring the content marked by this indication and using the product incorrectly may lead to injury or property damage.

Types of Precautions

Forbidden	Indicates actions that are forbidden (must not be performed)
Forbidden	Indicates that disassembly is forbidden.
Mandatory	Indicates actions that are mandatory (must be performed)
	Marks content that should receive your full attention.

⚠ Warning

Do not disassemble or modify the product. Doing so could lead to an accident, fire, or electric shock. Forbidden

Store screws and other small objects where small children cannot reach them. If one of these small objects is swallowed, consult with a doctor immediately.

When replacing fuses, be sure to use fuses with the specified current rating. Failing to do so could lead to an accident or fire. Forbidden Mandatory

Only connect the product to a 12 VDC negative ground car. Failing to do so could lead to an accident or fire. Mandatory

Before you begin wiring, remove the ground wire from the negative terminal of the battery. Failing to do so could lead to electric shock or injury.

Do not cut the insulation on a cord and take power from another device. Doing so could lead to fire or electric shock. Forbidden

Do not install the product in a location where it will obstruct the driver's forward view; interfere with the operation of the steering wheel, gearshift, or the like; or pose a threat to passengers. Doing so could lead to an accident or injury. Forbidden

When making a hole in the vehicle body, be careful to avoid damaging pipes, the fuel tank,electrical wiring, and the like. This kind of damage could lead to an accident or fire.

When installing and grounding the product, do not use any of the bolts or nuts of the steering wheel, brakes, fuel tank, or the like. Doing so could make the brakes stop working or lead to fire. Forbidden

Do not install the product near the passenger-side airbag. Doing so could interfere with the operation of the airbag and lead to an accident or injury. Forbidden

Bundle cords so that they don't interfere with driving. Wrapping cords around the steering wheel, gearshift, brake pedal, or the like, could lead to an accident or damage equipment.

⚠ Caution

Connect the product properly according to the instructions. Failing to do so could lead to fire or an accident. Forbidden

Do not sandwich cords between the seat railing or allow them to touch protrusions. Resulting breaks or shorts could lead to electric shock or fire.

Do not block vents or heat sinks. Doing so could lead to fire or damage equipment.

Use the accessories according to the instructions, and attach them securely. Failing to do so could lead to an accident or damage equipment. Forbidden

Do not install the product where it may be exposed to water or in a place with high levels of humidity or dust. Doing so could lead to fire or damage equipment. Forbidden

The installation and wiring of this product requires specialized skills and experience. Have the product installed by an Alpine authorized dealer.

Tools Required

Panel Removal Tool	Sockets	#2 Flathead Screwdriver
	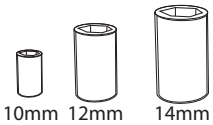	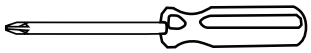
Wire Cutters	**Extension**	**Ratchet**
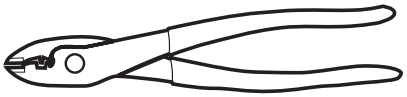	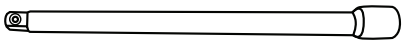	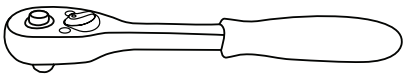
	Cordless Power Drill	**Cordless Impact Gun**
	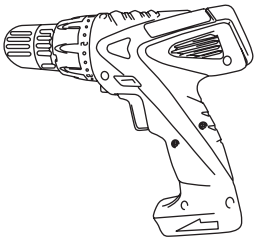	

Accessory List

Amplifier Assembly	Subwoofer Assembly	Main Harness	Power Cable
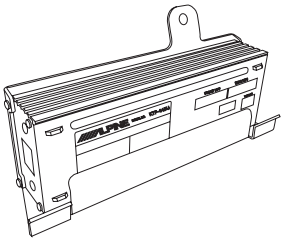	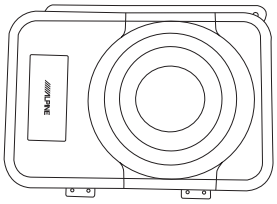		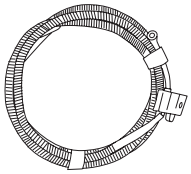
T-Harness	**RCA Adapters**	**(10) Cable Ties**	**Lock Washer**
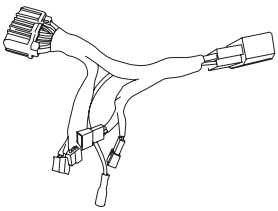			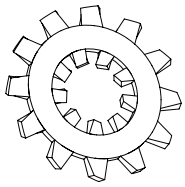
M6×30 Screws	**Stand off spacer**	**½” Self tapping screw**	
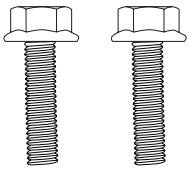	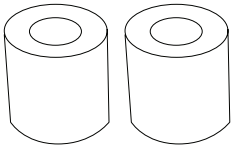	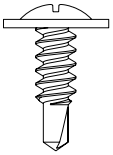	

Factory Equipment Removal Process

1 Use a panel removal tool to release clips of the radio bezel and remove it.

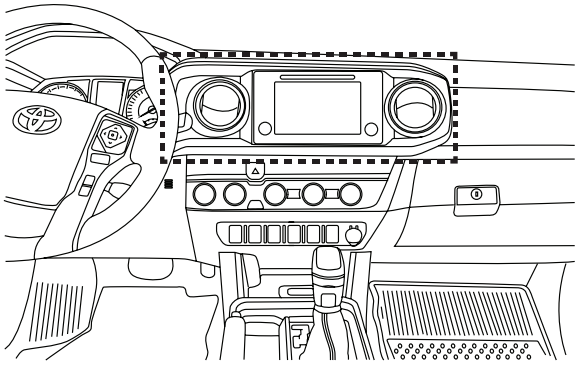

2 Use a 10mm socket to extract (4) 10mm screws from the factory radio, disconnect and remove it.

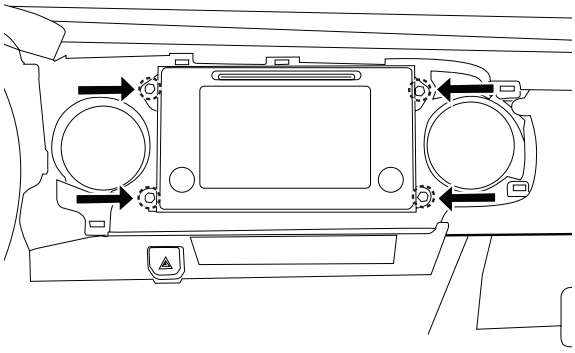

3 Remove the drive's side door sill by carefully lifting it.

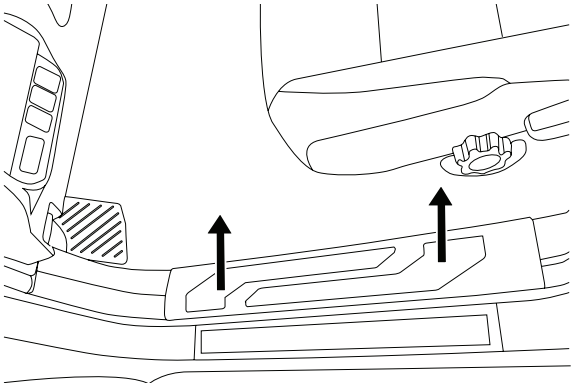

4 Remove the plastic nut on the driver's kick panel and carefully lift it to remove it.

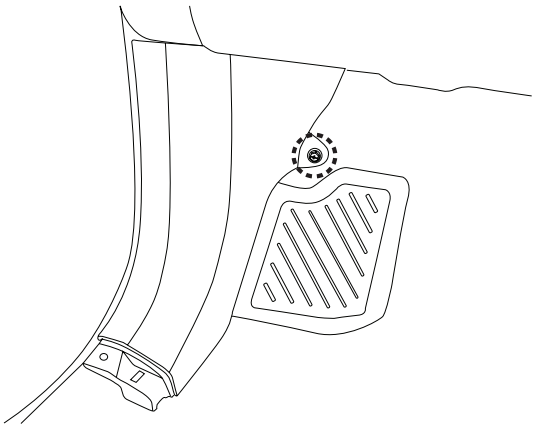

5 Remove the rear left door sill by carefully lifting it.

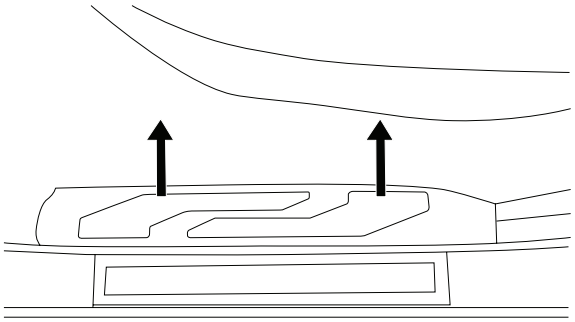

6 Remove the driver's side lower seat belt screw cover on the B-Pillar to reveal a 14mm screw. Remove the screw using a 14mm socket.

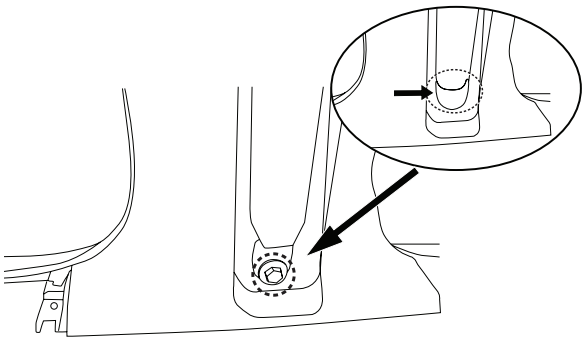

Factory Equipment Removal Process (continued)

7 Pull the weather seal on both sides of the B-Pillar cover.

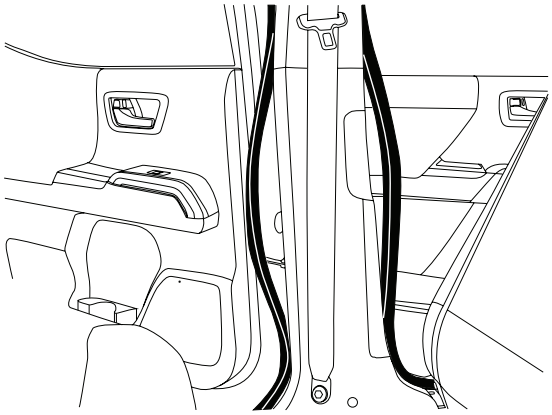

8 Use a panel removal tool to release the B-Pillar cover and remove it.

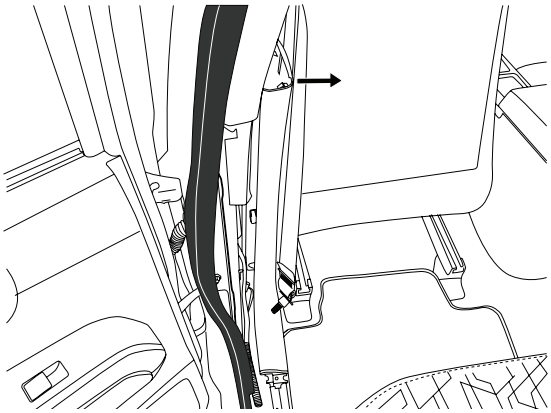

9 Remove the rear seat headrest by pressing both release tabs.

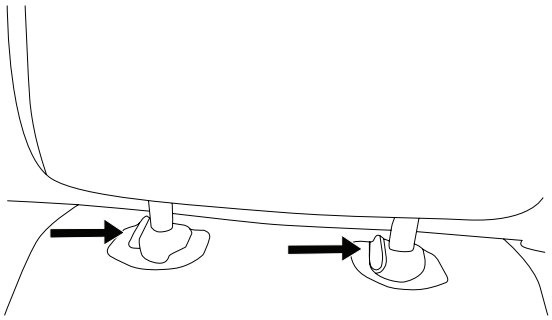

10 Flip the left rear back rest down and remove the (2) screw covers on the lower parts of the seat.

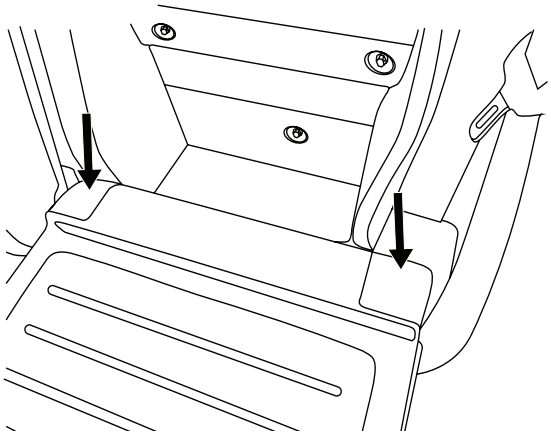

11 Use a 14mm socket to extract the (2) mounting bolts on the back rest and remove it.

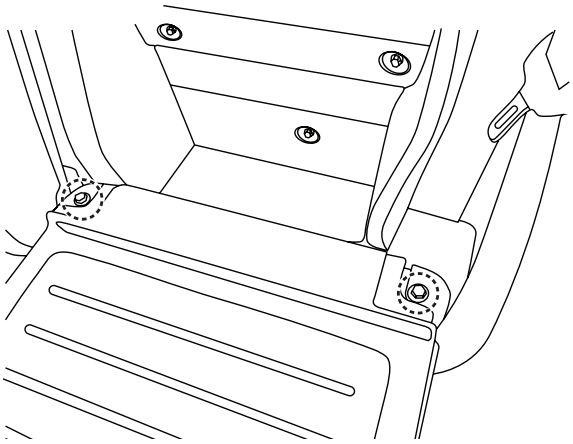

12 Use a 12mm socket to extract (2) screws on the bracket next to the C-Pillar and remove it.

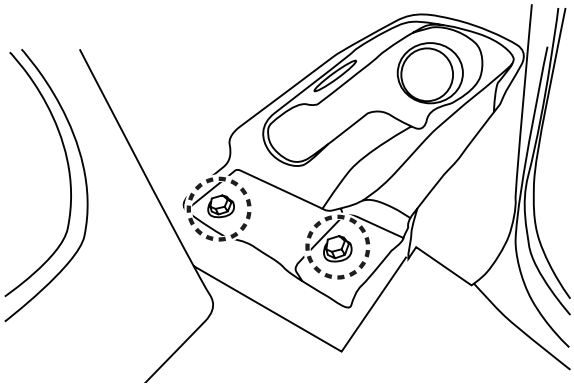

Factory Equipment Removal Process (continued)

13 Use a 10mm socket to extract (3) screws from the plastic compartment and remove it.

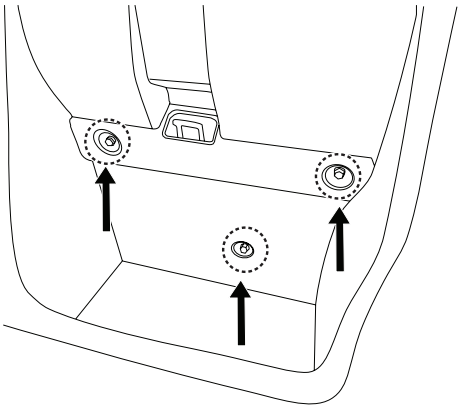

14 Pull the rubber door seal on the C-Pillar plastic cover.

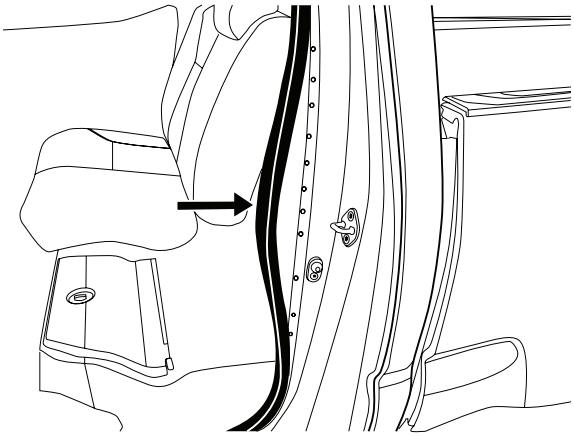

15 Use a panel removal tool to release the clips on the C-Pillar cover and remove it.

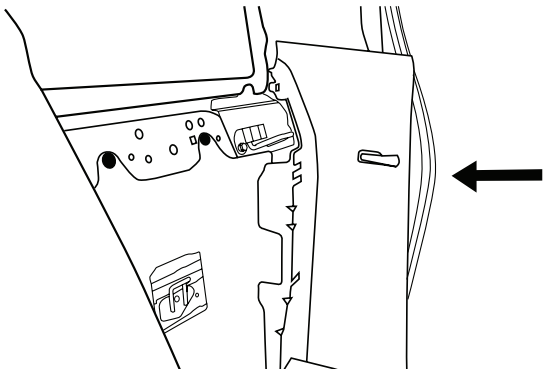

Installation

1 Connect the power cable to the Positive (+) battery terminal in the engine compartment and route the cable towards the firewall as shown below. **Note: The negative terminal should remain disconnected unit the installation is completed.**

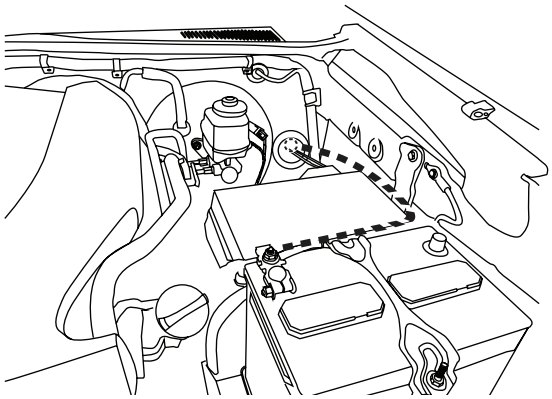

2 Route the power cable thru the rubber grommet on the firewall on the passenger side.

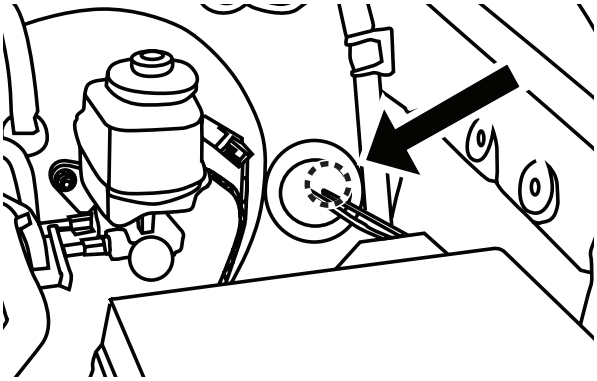

Installation (continued)

3 Remove the paint to expose bare metal. Attached the Negative (-) ground terminal with the provided hardware.

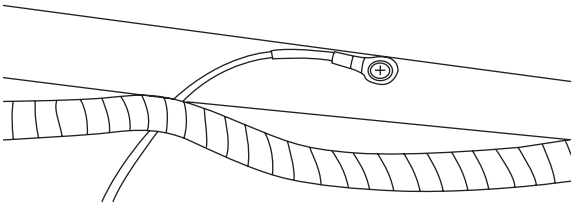

4 Route the main harness to the front of the vehicle following the factory harness.

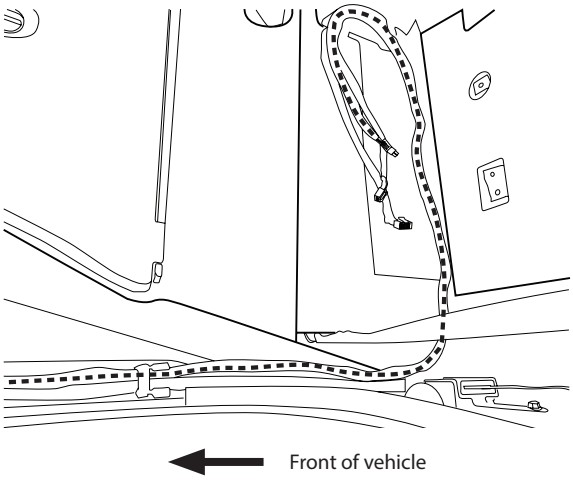

5 Route the main harness to the radio cavity as shown below.

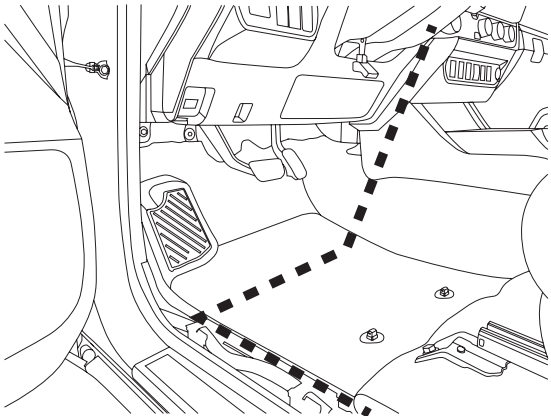

6 Secure the main harness to the factory harness using the provided cable ties.

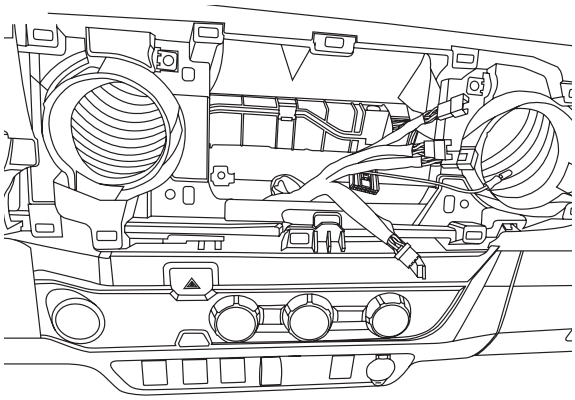

7 Use a 9/32 drill bit to create the subwoofer level knob opening. A panel blank is highly recommended (shown below). Use the provided nut to secure it and place the knob on the dial.

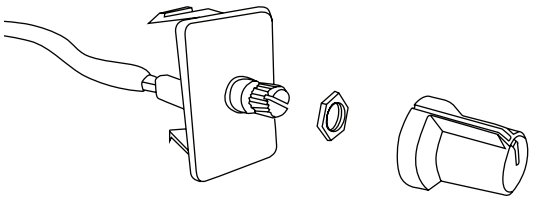

8 Connect the power wire to the main harness and secure any excess wiring at the kick panel using the provided cable ties.

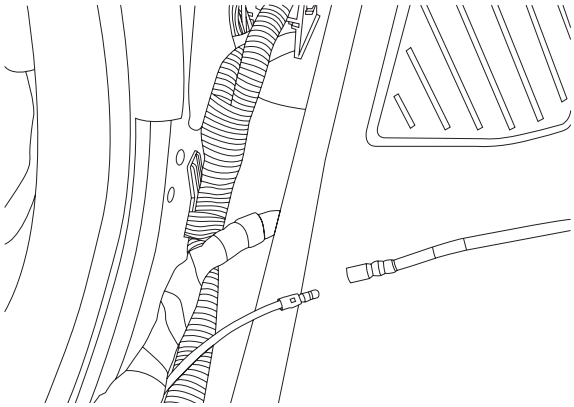

Installation (continued)

9 Install the C-Pillar plastic cover back to its respective location.

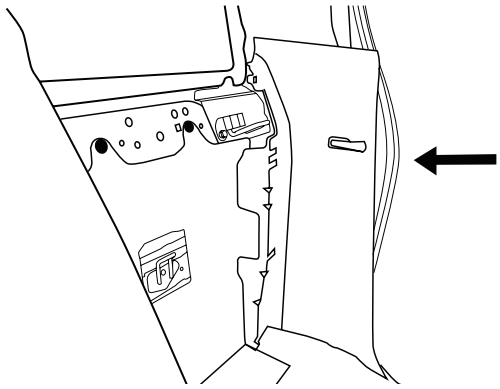

10 Trim the left side of the rear left plastic compartment following the dimensions below.

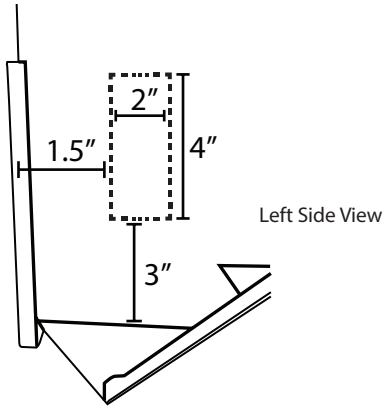

11 Snap the trimmed rear left compartment and connect and secure the amplifier bracket using (1) 10mm factory screw.

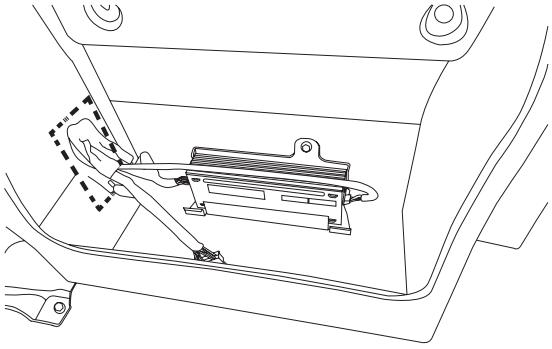

12 Slide the subwoofer into the lower amplifier bracket and secure it using the provided (2) M6×30 screws and (2) Stand off spacers.

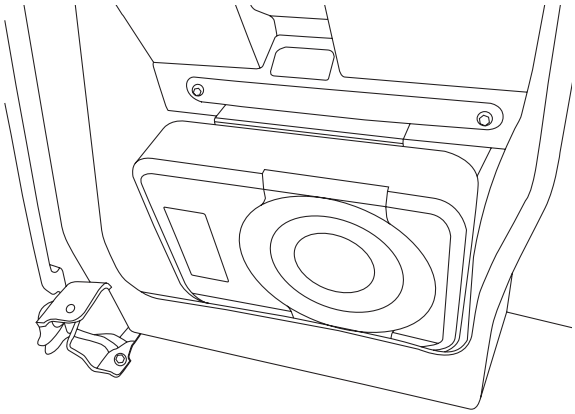

13 Connect the wiring according to the corresponding system diagram on pages 9, 10 or 11. **Note: Be sure to set all gains and crossover settings are as recommended on the diagrams.**

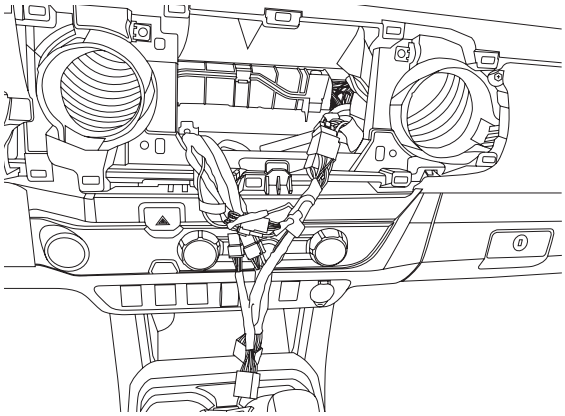

14 Return all removed components to their factory location and connect the **NEGATIVE (-)** battery terminal.

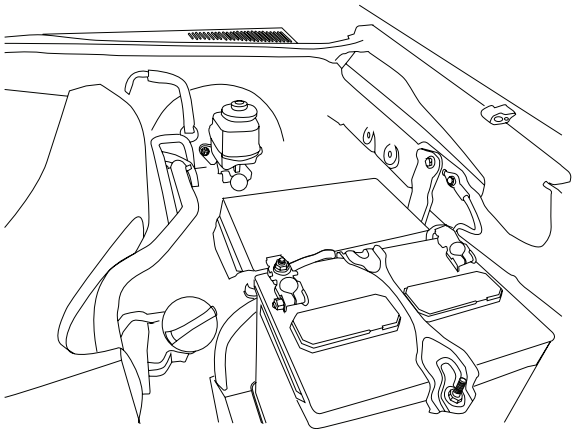

OEM Head Unit Wiring Diagram

To Vehicle Connectors

OEM T-HARNESS ADAPTER

TO OEM HEAD UNIT

Rear Speaker 6-Pin White Connector

Power Front Speaker 10-Pin White Connector

Front Speaker 4-PIN WHITE CONNECTOR

Rear Speakers 4-PIN BLACK CONNECTOR

Blue/White Amp Turn-On

Front

Rear

Subwoofer

WHITE/GRAY White Connector

GREEN/PURPLE Black Connector

BROWN/ORANGE Red Connector

Subwoofer Level Remote

BROWN/ORANGE Red Connector RCA Adapter

BLACK To Chassis Ground

RED To Battery Cable

To Vehicle's Battery POSITIVE (+) Terminal

Amplifier Speaker Wiring

CH 1 - White (+) White/Black (-)
CH 2 - Gray(+) Gray/Black (-)
CH 3 - Green (+) Green/Black (-)
CH 4 - Purple (+) Purple/Black (-)

ALPINE
HEAD UNIT POWER PACK KTP-445U

POWER PACK AMPLIFIER KTP-445U

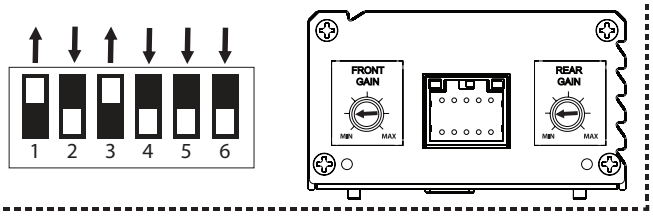

SUBWOOFER PWE-S8

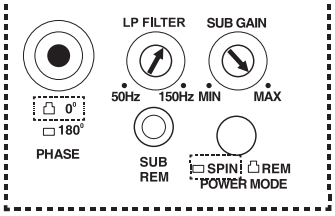

NOTE: FOR BEST PERFORMANCE SET AMPLIFIER AND SUBWOOFER TO RECOMMENDED SETTINGS AS SHOWN ABOVE

Aftermarket Head Unit Wiring Diagram

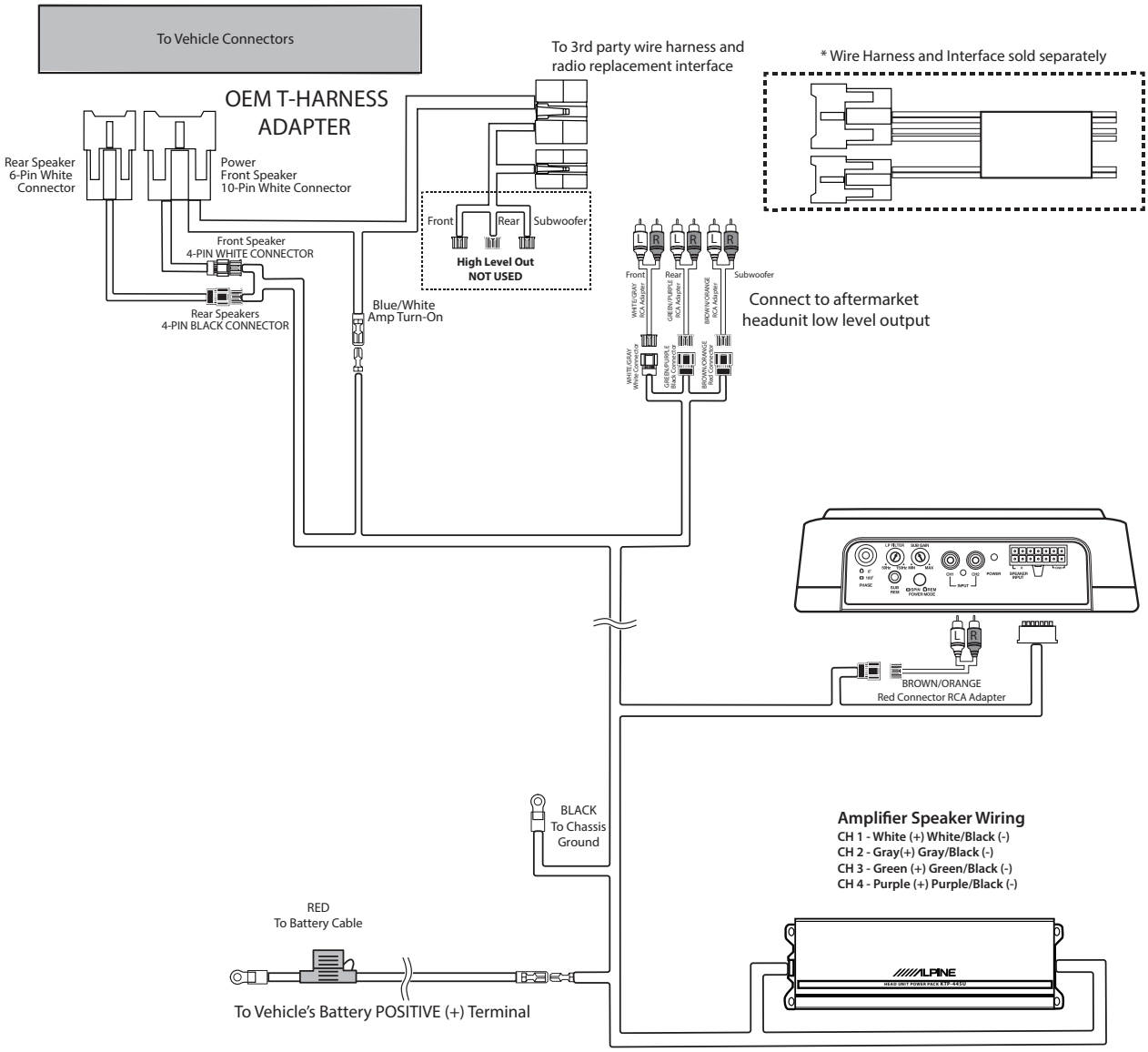

POWER PACK AMPLIFIER KTP-445U

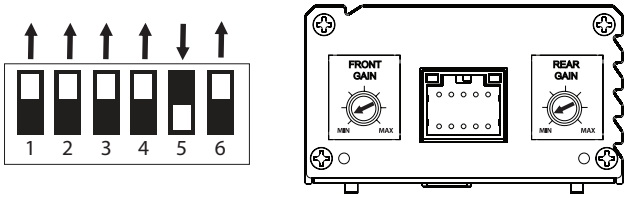

SUBWOOFER PWE-S8

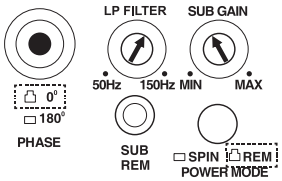

NOTE: FOR BEST PERFORMANCE SET AMPLIFIER AND SUBWOOFER TO RECOMMENDED SETTINGS AS SHOWN ABOVE

Alpine Restyle Head Unit Wiring Diagram

To Vehicle Connectors

To OBDII Connector

Connect to Alpine Restyle head unit low level output

Front Rear Subwoofer

WHITE/GRAY White Connector RCA Adapter

GREEN/PURPLE Black Connector RCA Adapter

BROWN/ORANGE Red Connector RCA Adapter

4 PIN BLACK CONNECTOR

Rear Rear

Front Front

4 PIN WHITE CONNECTOR

Blue/White Amp Turn-on

Blue Amp Turn-on

iDatalink MAESTRO Module

BROWN/ORANGE Red Connector RCA Adapter

BLACK To Chassis Ground

RED To Battery Cable

For a detailed Alpine Restyle head unit wiring diagram refer to it's corresponding installation manual.

To Vehicle's Battery POSITIVE (+) Terminal

Amplifier Speaker Wiring

CH 1 - White (+) White/Black (-)
CH 2 - Gray(+) Gray/Black (-)
CH 3 - Green (+) Green/Black (-)
CH 4 - Purple (+) Purple/Black (-)

POWER PACK AMPLIFIER KTP-445U

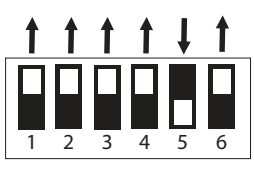

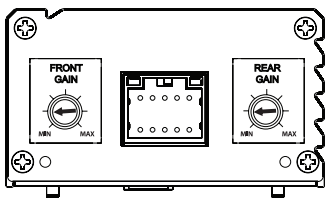

SUBWOOFER PWE-S8

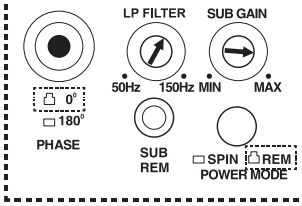

NOTE: FOR BEST PERFORMANCE SET AMPLIFIER AND SUBWOOFER TO RECOMMENDED SETTINGS AS SHOWN ABOVE